MODELS
CNE1430
CNY1250

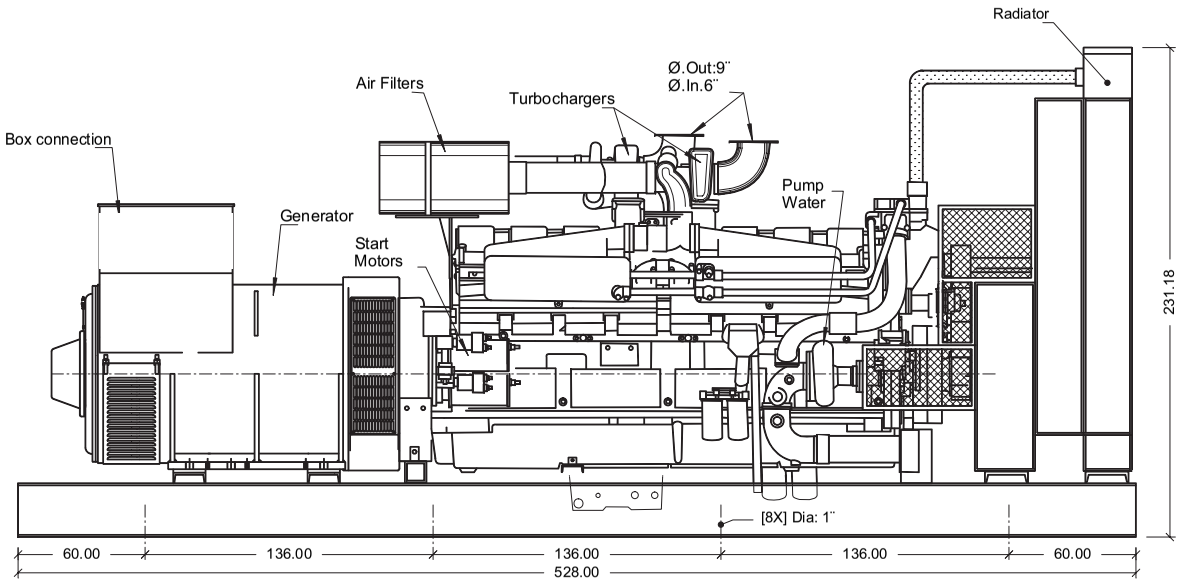

SIDE VIEW

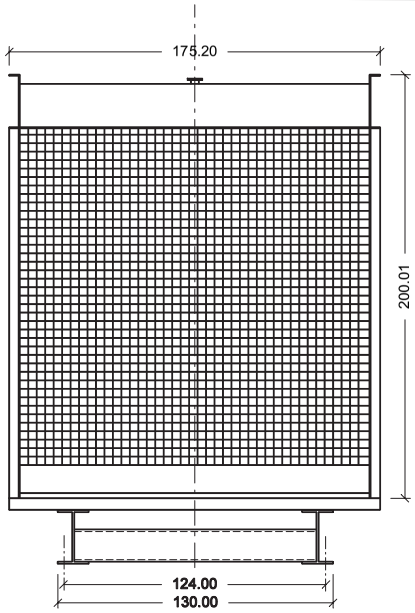

FRONT VIEW

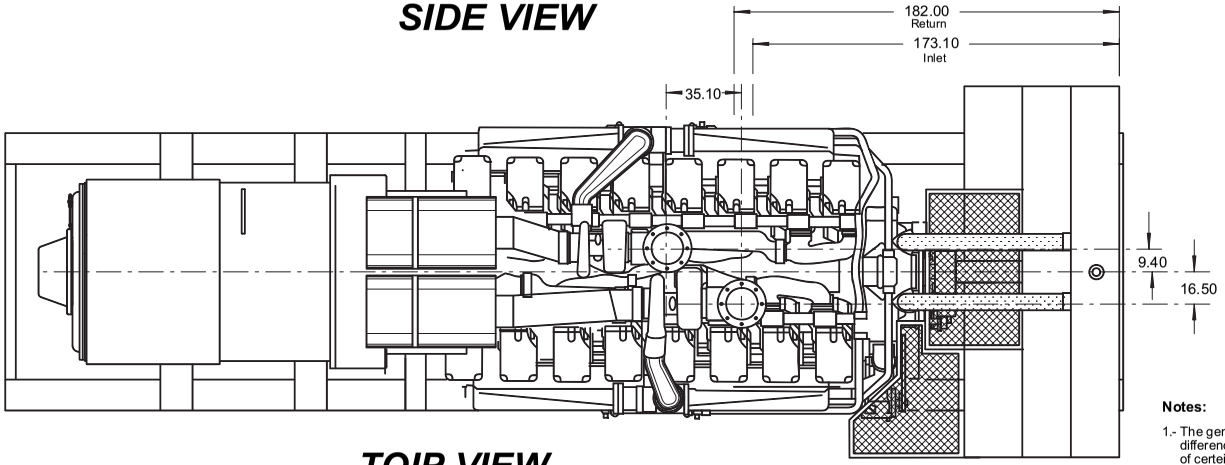

TOIP VIEW

DESCRIPTION	
RADIATOR :	55705
ENGINE :	KTA 50 G3
AIR FILTER :	AH1135 (2X)
TOTAL WEIGHT :	9300.0 Kgs.
SPRING (AVMS) :	8 PZS.

Notes:

1.- The genset dimensions are the same by family model, there could be only differences on the alternator lenght see specific general arregement drawing of certein model.
2.-Tr iton Power keeps the right to modify the information without prior notice.

ITEM	DESCRIPTION	CERTIFICATED	DATE

REVIEWS

CUSTOMER:

DRAW: ROGELIO GONZALEZ C.
DESIGN: ROGELIO GONZALEZ C.
REVISED: ING. FRANCISCO HARO M.
REVISED:
CERTIFICATED: ING. FRANCISCO HARO M.
MARKS: CM
SCALE: S/E

CUMMINS ENGINE KTA50G3
NEWAGE ALTERNATOR

PURCHASE ORDER:
DATE: MAY 12 2004
CODE: **CNE/Y-16**
DRW:
OF: