| MODELS |
|---|
| CME1985 |
| CME2150 |
| CMY1750 |
| CMY2000 |

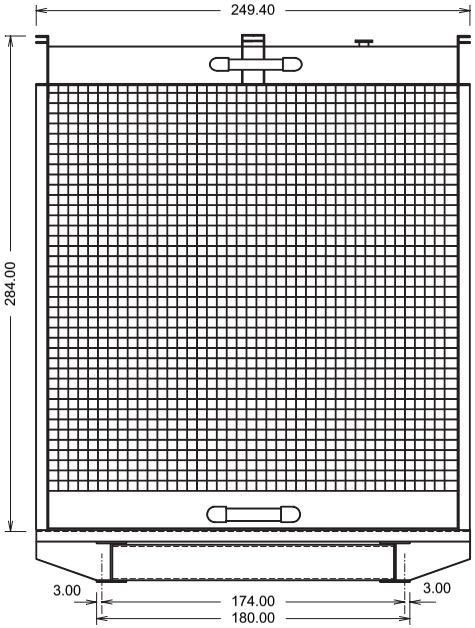


## FRONT VIEW

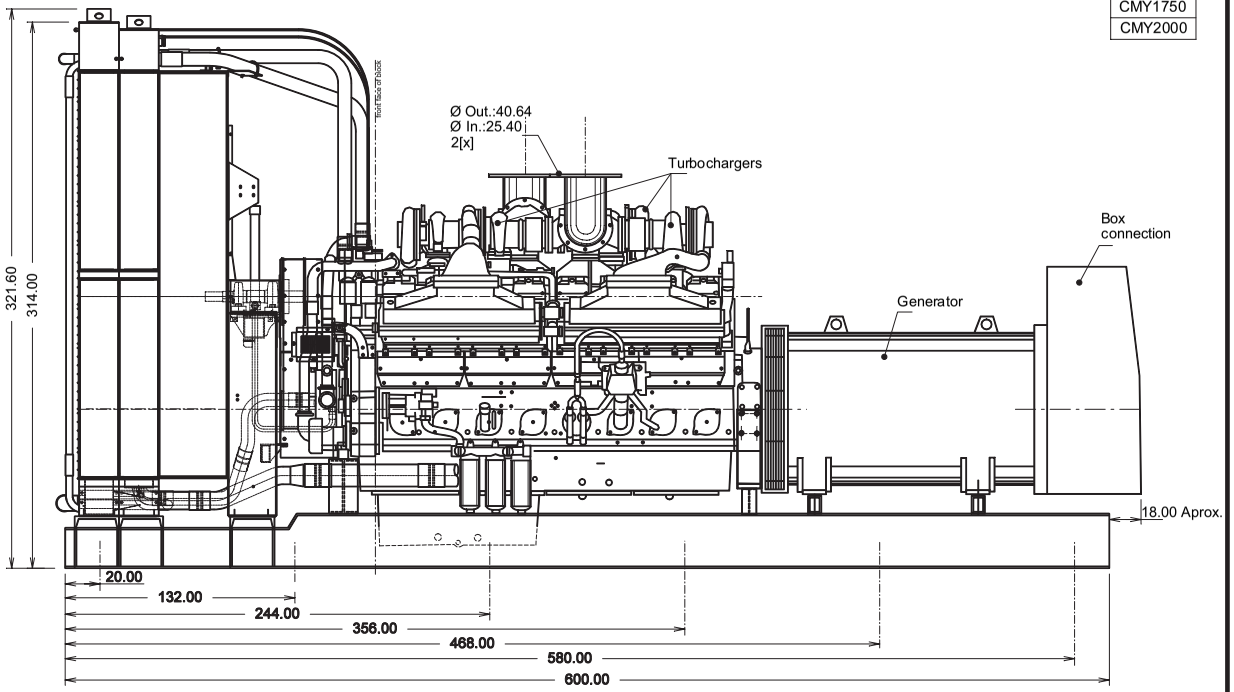


## SIDE VIEW

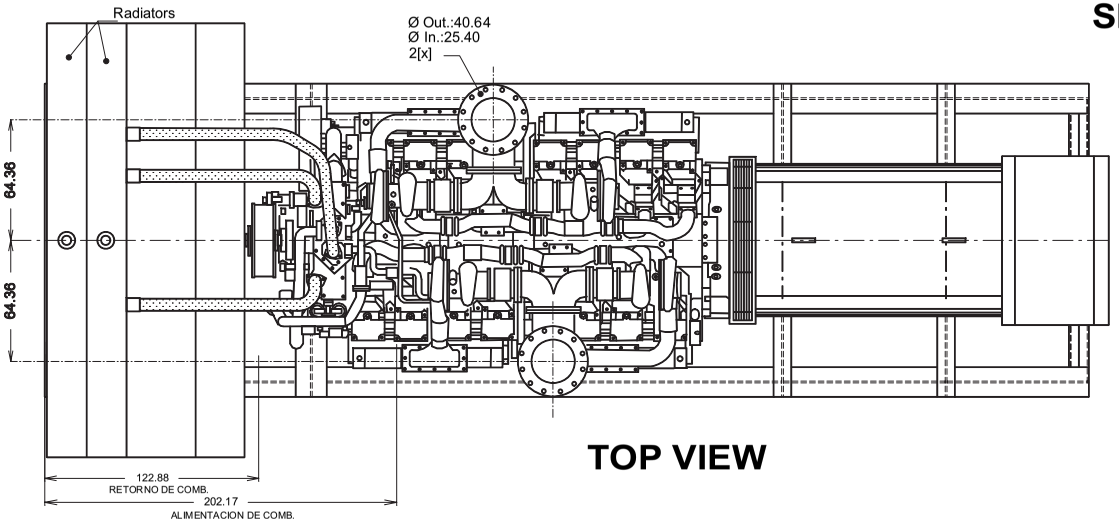


## TOP VIEW

| DESCRIPTION |
|---|
| RADIATOR : BEARWARD 56386-01 |
| ENGINE : QSK60 G3/G4/G5/G6 |
| AIR FILTER : - 4[X] |
| TOTAL WEIGHT : 14,624.0 KGS. |
| # SPRINGS (AVMS) : 12. AMORT. |

**Notes:**

1.- The genset dimensions are the same by family model, there could be only differences on the alternator lenght see specific general arregement drawing of certein model.
2.- Triton power keeps the right to modify the information without prior notice.

| ITEM | DESCRIPTION | CERTIFICATED | DATE |
|---|---|---|---|
| | REVIEWS | | |

CUSTOMER:

DRAW: ROGELIO GONZALEZ C.
DESIGN: ROGELIO GONZALEZ C.
REVISED: ING. FRANCISCO HARO M.
REVISED:
CERTIFICATED: ING. FRANCISCO HARO M.
MARKS: CM
SCALE: S/E

**CUMMINS ENGINE**
**QSK60G3/G4/G5/G6**
**MARATHON ALTERNATOR**

PURCHASE ORDER:
DATE: MAY 12 2004
CODE: **CME/Y-18**
DRW:
OF: